Lab 4: Second-Order Filter Circuits

Due Date: Week of Oct. 6

This time, we look at properties of second-order filters and measure second-order frequency response plots.

Prior to Lab

1. Calculate the transfer functions, and the values of f_o, Q_P, and G_o for each of the circuits. (Note: In lab, we use real frequency f rather than angular frequency ω, as we usually do in class. Don't get confused.)
2. Make sure that you have a flash drive or some other means for saving data.

General comments

1. When measuring higher-Q_P filters, it may be necessary to increase the number of points per decade in the region near f_o. If the spacing of measurement points is far apart, it is possible to miss the details of the "bump" of a low- or high-pass circuit or the sharp peak of a bandpass circuit.
2. All magnitude frequency response plots should be Bode plots (decibels on the vertical axis).

A. Low-Q low-pass active filters

Figure 1. (a) First-order low-pass. (b) Second order low-pass.

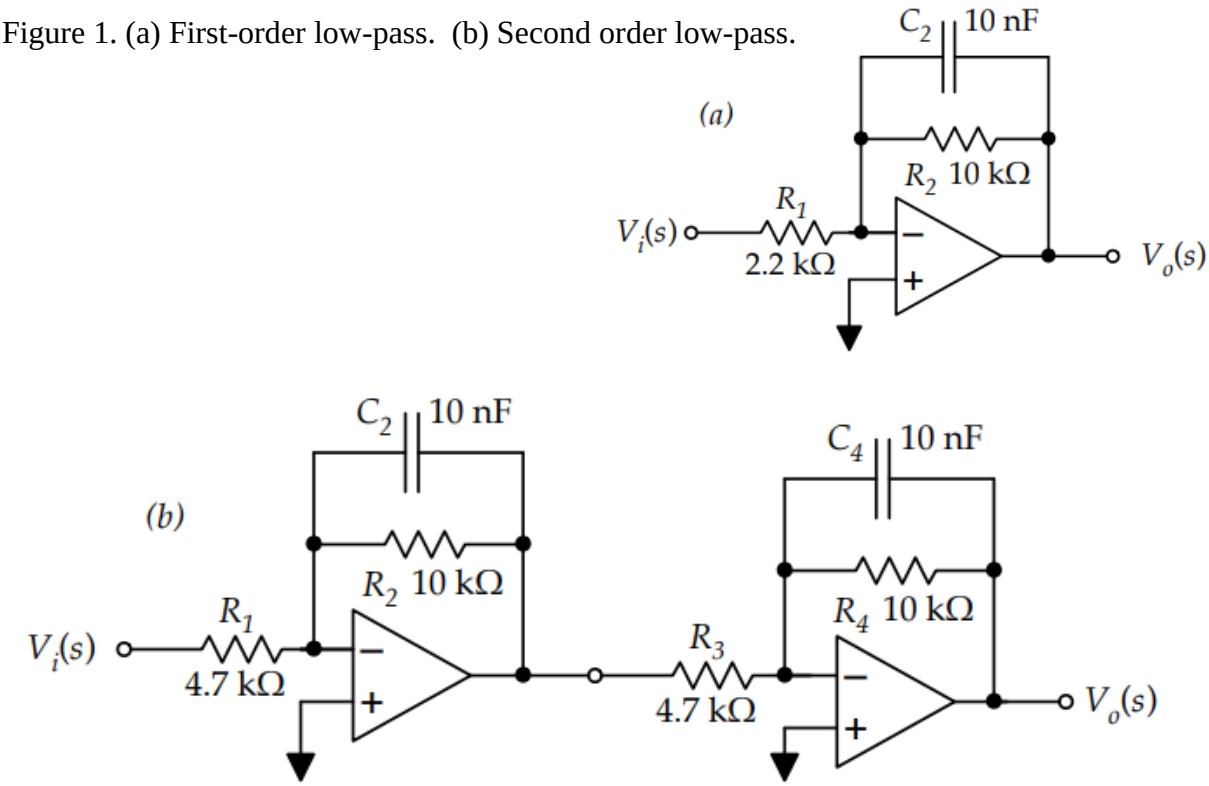

This experiment focuses on realizing second-order system by cascading two first-order systems. Note that the theoretical portion of this was solved in the homework.

1. Calculate the expected f_c and G_o for first order circuit in Fig. 1(a) and the f_o, Q_P, and G_o for the second-order circuit of Fig. 1(b).

2. Using the quantities from (1) above, construct the transfer functions for the first-order circuits in Fig. 1(a) and the second-order circuit of Fig. 1(b). Now calculate the theoretical magnitude (in dB) and phase (in degrees) of both circuits at 100 Hz, 1.6 kHz, 10 kHz, and 100 kHz.

3. Build the two circuits using LMC 660 op amps with ± 8-V power supplies and a sinusoidal input voltage. Set the input amplitude low enough so that the output does not clip — 0.25 V_{RMS} should be fine. Use the Loopinator to measure the frequency response over the range of 100 Hz to 100 kHz with at least 15 points per decade.

4. For both the first-order circuit and the second-order circuit, plot your theoretical calculations from (2) on top of the measured frequency response from (3) on the same plot. Comment on the accuracy and any differences you observe.

B. RLC 2nd-order filters — High Q.

This experiment looks at creating second-order systems using both an inductor and capacitor.

The three circuits shown in Fig. 2 – 4 use the same components, but with different configurations to give the various types of filter response. For each of the circuits, calculate f_o, Q_P, and G_o. Then, using the Loopinator, measure the frequency response for each, twice. First use R = 150 Ω and then repeat with R = 1.5 kΩ. Measure over a range from 100 Hz to 100 kHz with at least 15 points per decade.

Graph the measured and calculated magnitude response for each circuit together on one Bode plot. Also graph the measured and calculated phase response of each circuit together on one plot.

Figure 2. Low-pass.

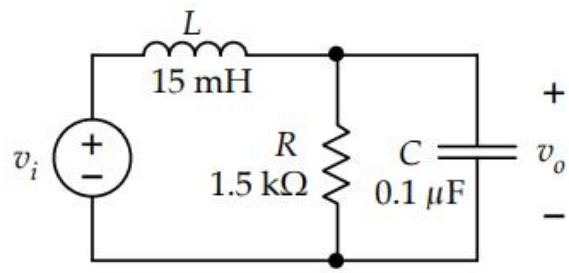

Figure 3. High-pass

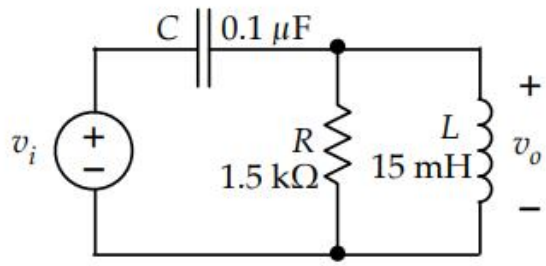

Figure 4. Band-pass

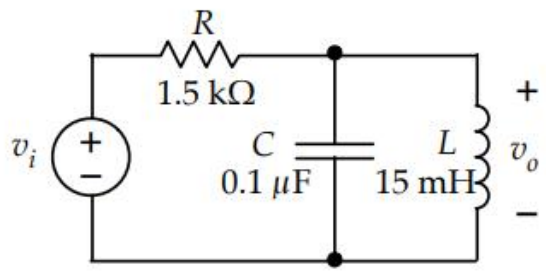

C. Active Filter Design

Design, build and test a unity gain, low-pass Sallen-Key filter. Use the LMC660 op amp with $\pm 8\ V$ supplies along with resistors and capacitors from your kit.

Your filter should have a cutoff frequency of $f_c = 1\ kHz$ ($\pm 10\%$) along with a quality factor of $Q = 1/\sqrt{2}$ ($\pm 10\%$).

Use the Loopinator to measure the frequency response from 100 Hz to 100 kHz with at least 15 points per decade. Make sure to plot the measured gain along with the theoretical gain on the same plot. Also plot the measured and theoretical phase on the same plot.

Reporting

Prepare and submit a report after you have finished the lab – a template is available. Each lab group is required to submit a report (i.e. one report for two people). Be sure to include all of the frequency response graphs and answer any questions specified in the template. The report is due in one week at your normal lab time.

Comment regarding inductor series resistance

Real inductors always have some series resistance due to the resistivity of the wire in the coil. For high-quality inductors, the series resistance may be less than 1 Ω and will probably have negligible effect in many applications. For the 15-mH inductors that are being provided, the series resistance should be around 10 Ω. (You should measure the series resistance for your inductor using the ohm-meter.) The parasitic series resistance may have noticeable effects on the measurements of the circuits in part B. This higher resistance will show its effect by making the bandpass frequency-response curve asymmetric and by introducing extra loss whenever the inductor is carrying higher currents, like when it is in series with the source. If you see these effects in your measurements, you should make note of them in your report.